1GT101DC

ABSOLUTE MAXIMUM RATINGS (2)

SUPPLY VOLTAGE	+30V CONTINUOUS
VOLTAGE EXTERNALLY APPLIED TO OUTPUT	-0.5 TO +30V (OUTPUT HIGH)
OUTPUT CURRENT	40 mA SINKING

RECOMMENDED OPERATING CONDITIONS

PARAMETER	CONDITIONS	MIN	TYP	MAX	UNITS
OPERATING TEMPERATURE		-40		+150	°C (10)
SUPPLY VOLTAGE		4.5		24	VDC
SUPPLY CURRENT Icc			10	20	mA
Vsat	LOW OUTPUT			.4	VDC
OUTPUT CURRENT	LOW OUTPUT			20	mA
OUTPUT LEAKAGE CURRENT	HIGH OUTPUT			10	μ A
RISE TIME	10% TO 90%			15	μ S
FALL TIME	90% TO 10%			1.0	μ S

OPERATING SPECIFICATIONS (3)(9)

	LIMIT	CONDITIONS	UNITS
(4) OPERATE	3.3°±1.25°	AIR GAP 0,13-2,03	mm
(5) RELEASE	4.4°±2.5°	VSUPPLY 4.5 - 24	VOLTS
		TEMP -40 TO 150	DEG. C
		RPM 10 TO 5000	

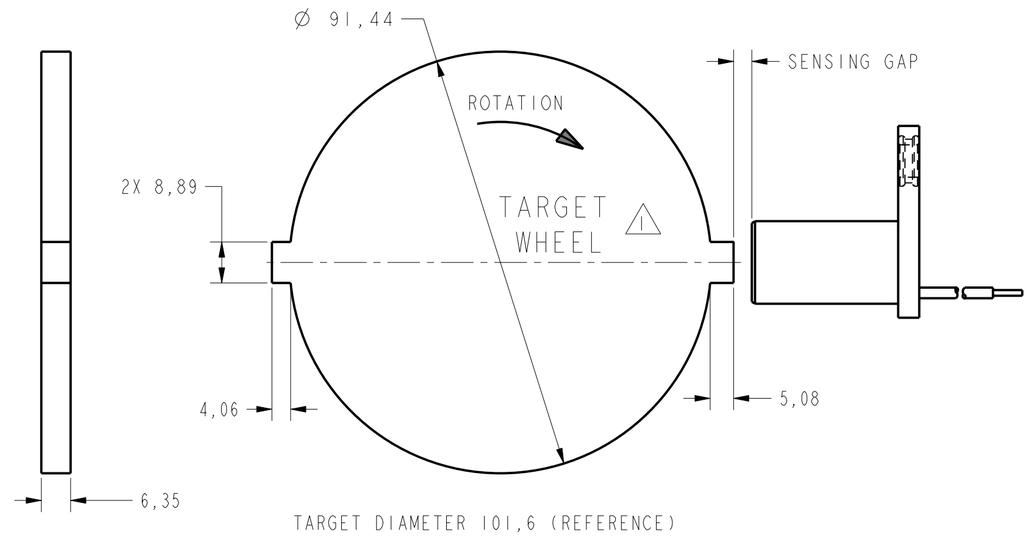

FIGURE 1

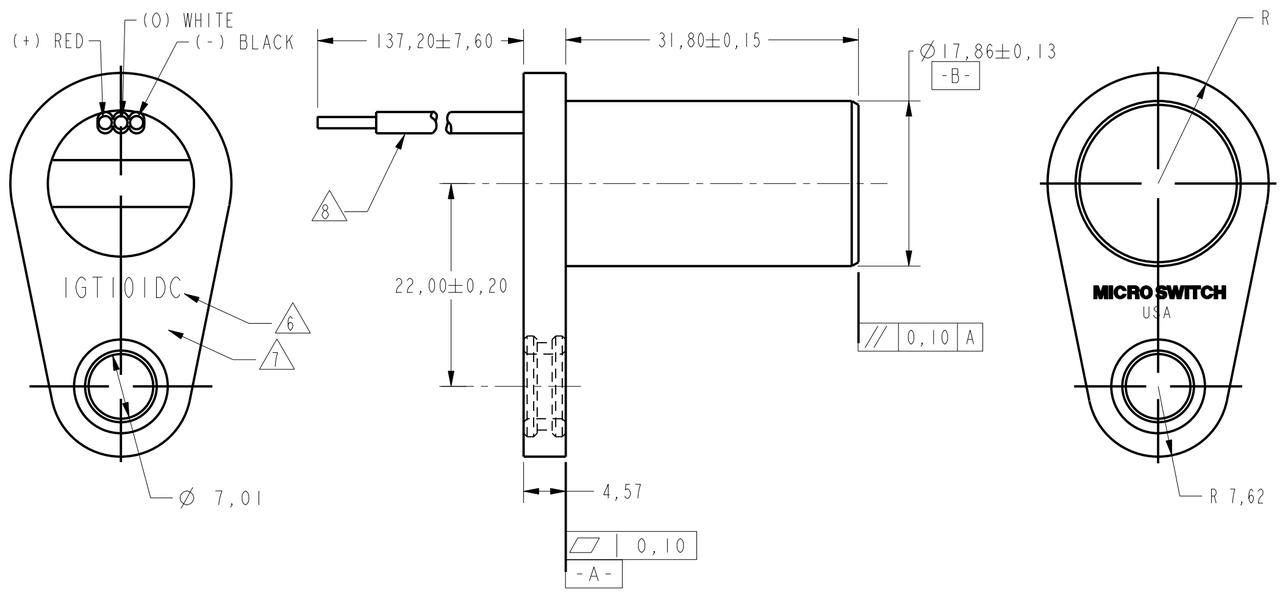

NOTES

(1) TARGET SHOULD BE MADE OF GOOD MAGNETIC MATERIAL (C-1018), ANNEAL AFTER MACHINING OR FORMING
(2) MAXIMUM LIMITS THAT SWITCH WILL WITHSTAND WITHOUT DAMAGE
(3) OPERATING SPECIFICATION IS BASED ON TARGET SHOWN IN FIGURE 1 AND WILL VARY WITH TARGET GEOMETRY
(4) OPERATE (DEGREES) IS THE ANGULAR DISTANCE FROM THE LEADING EDGE OF THE TOOTH TO THE CENTERLINE OF THE SENSOR
(5) RELEASE (DEGREES) IS THE ANGULAR DISTANCE FROM THE TRAILING EDGE OF THE TOOTH TO THE CENTERLINE OF THE SENSOR
(6) MICRO SWITCH PART # 1GT101DC THIS AREA
(7) DATE CODE YYWW THIS AREA
(8) 22 GAUGE WIRE, CROSSLINKED POLYETHYLENE INSULATION
(9) ELECTRICAL CHARACTERISTICS GUARANTEED WITH MAX EXTERNAL LOAD CAPACITANCE ≤ 550 pfd
(10) OPERATING TEMPERATURE APPLIES TO SENSOR ONLY, WIRE IS RATED TO 135°C
11 RoHS COMPLIANT

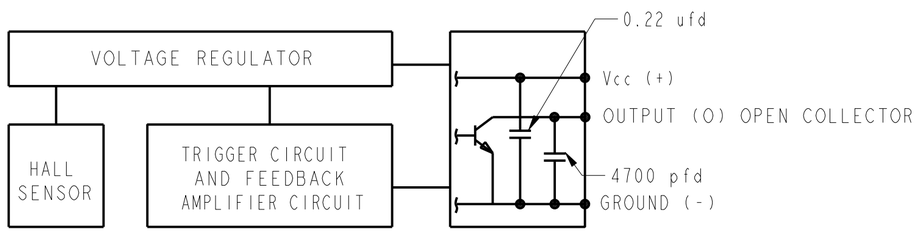

BLOCK DIAGRAM SHOWING CURRENT SINKING OUTPUT

CAUTION ELECTROSTATIC SENSITIVE DEVICES DO NOT OPEN OR HANDLE EXCEPT AT A STATIC FREE WORKSTATION

ESD SENSITIVITY: CLASS 3

THIRD ANGLE PROJECTION

SCALE 2:1

DO NOT SCALE PRINT

UNLESS OTHERWISE SPECIFIED TOLERANCES ARE

ONE PLACE	(.0)	±.030
TWO PLACES	(.00)	±.015
THREE PLACES	(.000)	±.005
ANGLES		±

WEIGHT

THIS DRAWING COVERS A PROPRIETARY ITEM AND IS THE PROPERTY OF MICRO SWITCH. A DIVISION OF HONEYWELL. THIS DRAWING IS NOT TO BE COPIED OR USED WITHOUT THE APPROVAL OF MICRO SWITCH.

MICRO SWITCH a Honeywell Division
FED. MFG. CODE 91929

GEARTOOTH SENSOR

CATALOG LISTING
1GT101DC

ANSI Y14.5M-1982 APPLIES

1GT101DC | PAGE 1 OF 1 | RELEASE NO. PR-19954 | REPLACES GT08GA
DRAWING NUMBER | ISSUE 10 | CHECK
REVISIONS

A	CO-70352	JAS 6 JUN 91	
B	REM DR PR19954	JAS 23APR92	
B	CO-72666	JAS 23APR92	
C	CO-75618	JAF 22JUN93	CHECK
D	CO-76783	JJO 10DEC93	
E	CO 81948-A	DLT 12JAN96	2 APR 91
F	CO-83529	JAK 26OCT96	
G	CO-93037	GRT 19JAN99	JAS
H	204349	GLH 08 NOV 01	CHECK
J	21332	JLH 01 MAY 06	

PTC/CAD 2D | DRAWN KAG 29 MAR 99